vibro-meter

INDUSTRIAL & MARINE

Since its foundation over 45 years ago in Fribourg, Switzerland, Vibro-Meter has been supplying reliable, high quality instrumentation systems to aviation, marine and industrial customers worldwide.

Our quality policy is one of the basic keys to the success of our company. The priority given to the needs and expectations of our customers, as well as the importance of technical innovation and the quality of our personnel, all contribute to our company's reputation.

Vibro-Meter's Aerospace division continues to be the leading supplier of monitoring systems for vibration, speed, pressure and ice detection for civil and military applications.

The Instrumentation division provides equipment for measurement and protection in industrial applications, testbeds and research in connection with load, force, torque, power, speed and displacement.

Vibro-Meter's INDUSTRIAL & MARINE division supplies complete monitoring solutions for turbomachinery applications, from the comprehensive range of transducers and associated machine protection systems to condition and performance monitoring systems. The principal parameters involved are :

- Vibration
- Speed
- Ice
- Displacement
- Dynamic pressure

Our international network of subsidiaries and distributors is never far away to provide assistance and technical support.

Switzerland and International
Vibro-Meter SA
Rte de Moncor 4
P.O. Box 1071
CH-1701 Fribourg

Phone : +41 26-407 11 11
Fax : +41 26-407 13 01
Email : vmsa@vibro-meter.ch

Germany
Vibro-Meter GmbH
Hamburger Allee 55
D-60486 Frankfurt am Main

Phone : +49 69-97 99 05 0
Fax : +49 69-97 99 05 26

USA
Vibro-Meter Americas
10 Ammon Drive
Manchester
New Hampshire 03103-7406

Phone : +1 603-669 0940
Fax : +1 603-669 0931

France
Vibro-Meter France SA
10, Rue Mercoeur
F-75011 Paris

Phone : +33 1-43 70 02 02
Fax : +33 1-43 70 02 76

Canada
Vibro-Meter Canada
5650, Boulevard Thimens
Ville Saint Laurent, QC
H4R 2K9

Phone : +1 514-956 0918
Fax : +1 514-956 9610

United Kingdom
Vibro-Meter Ltd.
Bramhall Technology Park
Hazel Grove, Stockport
Cheshire SK7 5BW

Phone : +44 161-483 0811
Fax : +44 161-483 2850

East Asia
Vibro-Meter Singapore PTE Ltd.
Block 1 #03-07 Wholesale Centre
West Coast Highway
SG-110 001 Singapore

Phone : +65-777 5177
Fax : +65-777 3180

ISO 9001

SWISS CERTIFICATION SCES 003

Representatives in 32 countries

Your local sales organisation:

Vibro-Meter SA, Fribourg / Switzerland 461.006 / 03.99 / E

vibro-meter

APPLICATION NOTE

Vibration Monitoring of PROPELLER, KAPLAN and BULB Turbine Hydro-Electric Groups

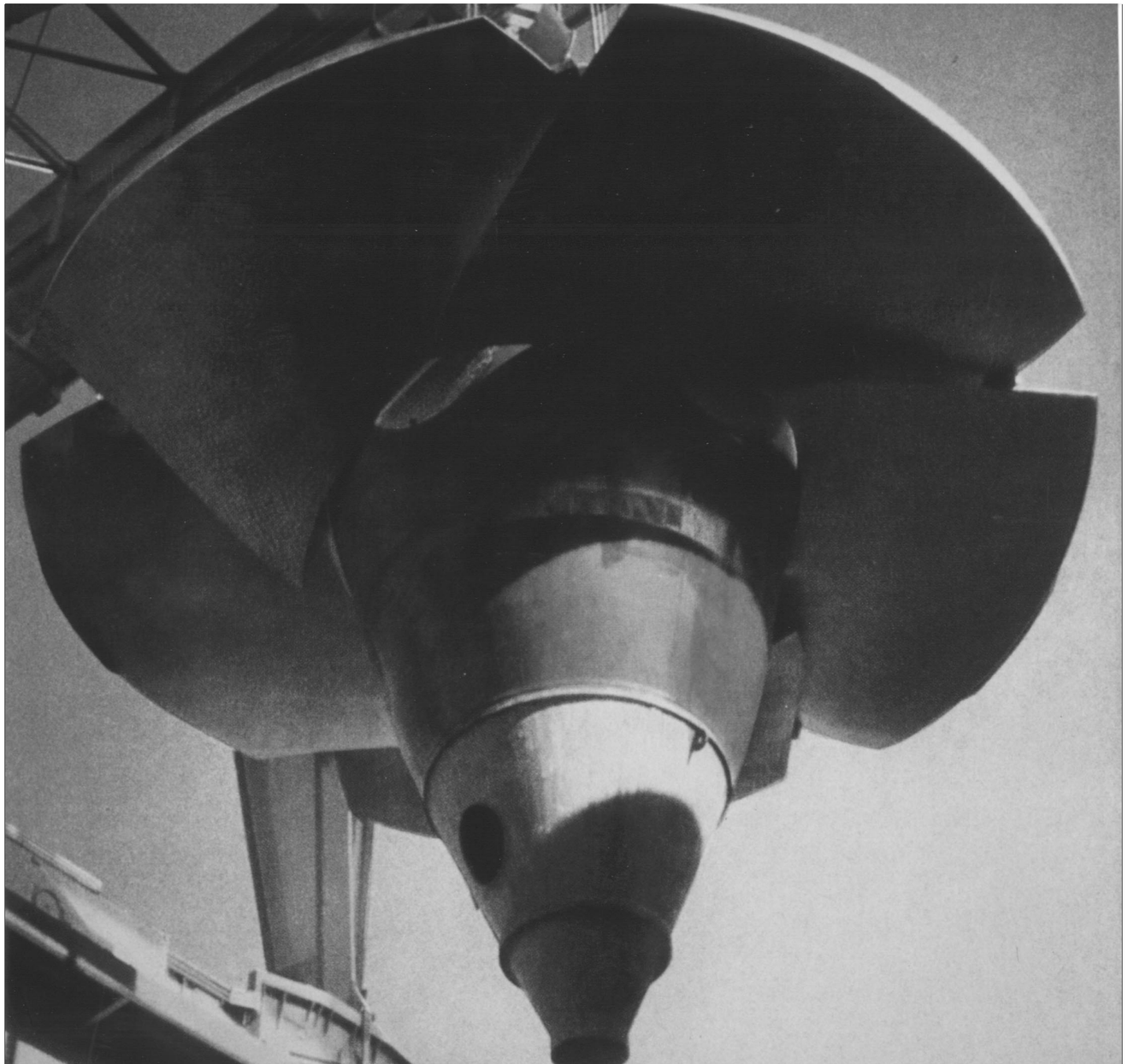

INDUSTRIAL & MARINE

Vibration Monitoring of PROPELLER, KAPLAN and BULB Turbine Hydro-Electric Groups

Introduction

PROPELLER, KAPLAN and BULB turbines cover a large power range and are characterized by their relatively low rotational speed. They can be used with vertical-axis machines for medium and large-scale power generation and also with BULB type horizontal-axis machines for small and medium-scale generation. Vibro-Meter has many years experience in the field of vibration monitoring, for hydro-electric machines as well as for very high power machines which must be considered on a case by case basis depending on their configuration.

This document regroups a certain number of general recommendations that are applicable to the majority of hydro-electric groups driven by PROPELLER, KAPLAN or BULB turbines.

Recommendations and International Standards

Two substantially different techniques exist for monitoring vibrations in rotating machines. Both are applicable to hydro-electric groups, depending on certain criteria. These two techniques are :

- Vibration measurement performed on non-rotating elements, for example bearings : ISO 10816-1 and 10816-5 (these standards replace ISO 2372).

- Vibration measurement performed on rotating shafts, for example the relative vibration between the shaft and its bearing : ISO 7919/1 and 7919/5. These standards will soon be replaced by ISO 10817-1 and 10817-5.

These methods are governed by the above-mentioned international standards. You are advised to consult them as they contain important indications on the criteria used for the choice of one or the other method, or of both methods together, as is the case for large and very large machines.

As a general rule it is the measurement of relative shaft vibration that should be adopted for machines with journal bearings, independently of whether they are horizontal-axis or vertical-axis. Hydro-electric groups with PROPELLER, KAPLAN or BULB turbines fall into this category. However, it is quite often the case that because of the mechanical configuration and large dimensions of these machines, access to the bearing is difficult or the bearings are not sufficiently rigid to enable relative shaft vibration measurements to be made. In this case the only possibility is to measure the absolute vibration on the bearing or other machine structure. The use of accelerometers is limited for this type of machine if the frequency of interest is less than 3 Hz (180 rpm). In this case other types of transducers such as velocimeters or piezo-resistive accelerometers must be used.

Measurements on Non-Rotating Parts

CA 201

IVC 632

CV 210

- The CA 201, which is a very robust industrial accelerometer with a sensitivity of 100 pC/g. This device requires a separate charge amplifier (IPC 620). Its integral cable is protected by a flexible leakproof stainless steel tube. Its robustness and high sensitivity make it suitable for large machines. Operating frequency f > 3 Hz.

- The CV 210 velocimeter with its associated IVC 632 conditioner. This combination is the solution recommended for slow machines as it may be used for frequency measurement from f = 1 Hz. In addition it has the advantage of providing a signal representing the vibration velocity, thereby avoiding the need to integrate the acceleration signal.

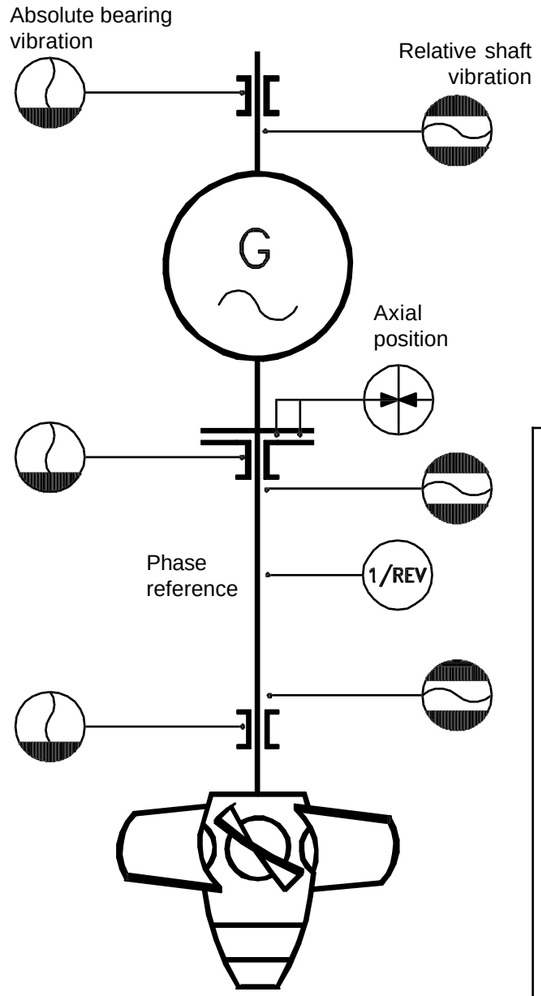

The SE 120 [1] is the result of collaboration with Electricité de France, who have adopted it for monitoring their hydraulic machines.

- The SE 120 [1] is a piezo-resistive accelerometer capable of measuring at very low frequencies. Its frequency range is nevertheless limited : 0.2 Hz to 750 Hz (-3 dB).

Measurements on Rotating Shafts

This sort of measurement is effected by one of Vibro-Meter's TQ 400 series of eddy-current contactless displacement transducers with a matching IQS 450 series signal conditioner. These transducers are available in various sizes and versions, which allows the best suited one to be chosen as a function of the environmental conditions at the mounting place, which must be chosen with care. Vibro-Meter remains at your disposal for advice.

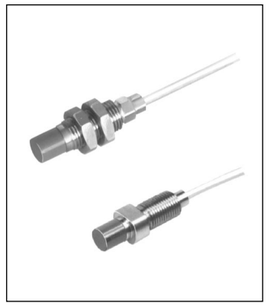

TQ 400

IQS 450

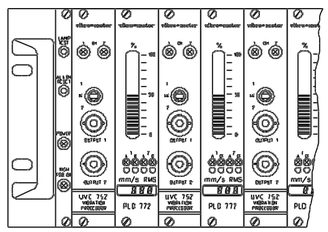

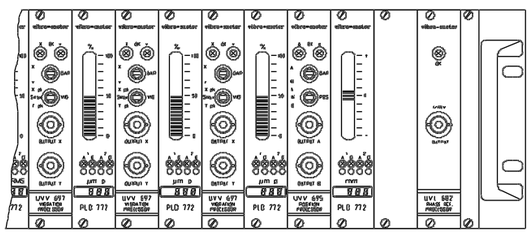

Monitoring Equipment

The electronic equipment used for monitoring and/or protection of the machine can be a compact, single-channel, programmable unit (e.g. Vibrotector 1000) or a modular, multi-channel system containing level detector and display modules (MMS system). These electronic systems contain relays which can activate alarms or shut down the machine when programmable thresholds are exceeded. Common or individual relay outputs can be used.

In addition, these electronic systems make available AC signals that may be used for frequency analysis or sent to data acquisition and processing systems for condition monitoring applications and/or to act as an aid for fault diagnosis.